Hydro Mot

M ISO axial piston motors

Hydromot M ISO is a range of robust axial piston motors especially suitable for mobile hydraulics.

Hydromot M ISO is of the bent-axis type with spherical pistons. The design results in a compact motor with few moving parts, high starting torque and high reliability.

The M ISO covers the entire displacement range 12-130 cm³/rev at a maximum working pressure of 40 MPa.

Hydromot M ISO well dimensioned, double tapered roller bearings permit high shaft loads and lead to excellent speed characteristics.

Hydromot M ISO high level of reliability is based on the choice of materials, hardening methods, surface structures and the quality assured manufacturing process.

Type		012	017	025	034	047	056	064	084	108	130
Displacement	cm³/rev.	12.6	17.0	25.4	34.2	47.1	56.0	63.5	83.6	108.0	130.0
Working pressure											
max. intermittent	MPa	40	40	40	40	40	40	40	40	40	35
max. continuous	MPa	35	35	35	35	35	35	35	35	35	30
Revolutions											
max. intermittent	rpm	8800	8800	7000	7000	6300	6300	6300	5200	5200	5200
max. continuous	rpm	8000	8000	6300	6300	5700	5700	5700	4700	4700	4700
min. continuous	rpm	300	300	300	300	300	300	300	300	300	300
Power											
max. intermittent	kW	54	74	86	115	145	175	195	215	275	285
max. continuous	kW	20	25	40	55	65	80	90	100	130	135
Start torque theoretical value	Nm/MPa	2.0	2.7	4.0	5.4	7.5	8.9	10.0	13.3	17.1	20.5
Mass moment of inertia (x 10^{-3})	kg m²	0.9	0.9	1.1	1.1	2.6	2.6	2.6	7.4	7.4	7.4
Weight	kg	8.5	8.5	9.5	9.5	16.5	16.5	16.5	28.0	30.5	30.5

Data concerning RPM are based on maximum premitted peripheral velocity for the tapered roller bearings.

Intermittent power data are based on maximum continuous speed and maximum working pressure.

Continuous power data are based on maximum output power without external cooling of the motor housing.

Intermittent duty is defined as follows: max 6 seconds per minute, e g peak RPM when unloading or accelerating.

Versions, main data

Example **M-012 W/N-I4 A/G-S**

Type:
M Motor with fixed displacement

Size:
012 Displacement cm³/rev.
017
025
034
047
056
064
084
108
130

Direction of rotation:
W Independent

Shaft seal:
N Nitrile
H Nitrile, high pressure
V Viton, high temperature

Connection cover

MISO 012-130	S	Angled 40° to the shaft center line
MISO 012-034	K	Combi
MISO 047-108	R	Side port connection
MISO 047-108	V	Angled 90° to the shaft center line

Connections:

MISO 012-034	G	ISO G thread
MISO 047-130	F	Flange (SAE J518, code 62)

Type of shaft:
Spline shaft (DIN 5480)

	A	C	E
MISO 012-017	W25x1.25x18x9g	W20x1.25x14x9g	
MISO 025	W30x2x14x9g	W25x1,25x18x9g	
MISO 034	W30x2x14x9g		
MISO 047–056	W35x2x16x9g	W32x2x14x9g	W30x2x14x9g
MISO 064	W35x2x16x9g		
MISO 084	W40x2x18x9g	W35x2x16x9g	
MISO 108	W45x2x21x9g	W40x2x18x9g	
MISO 130	W45x2x21x9g		

Key shaft (DIN 6885)

	B	D
MISO 012-017	∅25 k6	∅20 k6
MISO 025	∅30 k6	∅25 k6
MISO 034	∅30 k6	
MISO 047–056	∅35 h8	∅30 k6
MISO 064	∅35 h8	
MISO 084	∅40 k6	
MISO 108-130	∅45 k6	

Mounting flange:
I4 ISO 4-bolt (ISO 3019-2)

Choice of shaft seal

Motor	Code	Temp. °C	Max. housing pressure MPa at rpm 1000	2000	3000	4000	5000	6000	7000	8000	9000
012-034	N	75	0.55	0.27	0.18	0.14	0.11	0.09	0.08	0.07	0.06
	H	75	2.46	1.23	0.82	0.61	0.49	0.41	0.35	0.31	0.27
	V	90	0.55	0.27	0.18	0.14	0.11	0.09	0.08	0.07	0.06
047-064 MISO	N	75	0.55	0.27	0.18	0.14	0.11	0.09	0.08		
	H	75	2.46	1.23	0.82	0.61	0.49	0.41	0.35		
	V	90	0.55	0.27	0.18	0.14	0.11	0.09	0.08		
084-130	N	75	0.38	0.19	0.13	0.10	0.08	0.06			
	H	75	1.72	0.86	0.57	0.43	0.34	0.29			
	V	90	0.38	0.19	0.13	0.10	0.08	0.06			

Subject to design modifications without notice

Factors affecting the choice of shaft seal include the hydraulic motor housing pressure and the drainage oil temperature.

The drainage oil should have a maximum temperature of 75 °C with a Nitrile shaft seal and 90 °C with a Viton shaft seal. These temperatures must not be exceeded.

Code according to Versions, main data.

Dimensions
ISO 012-017

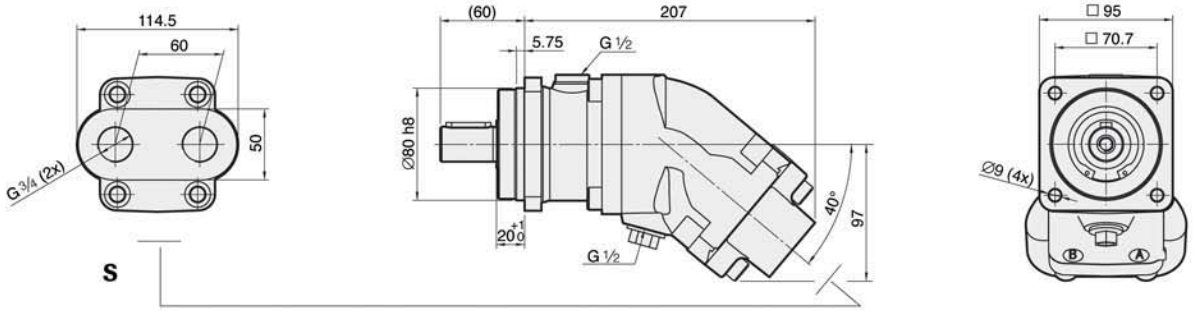

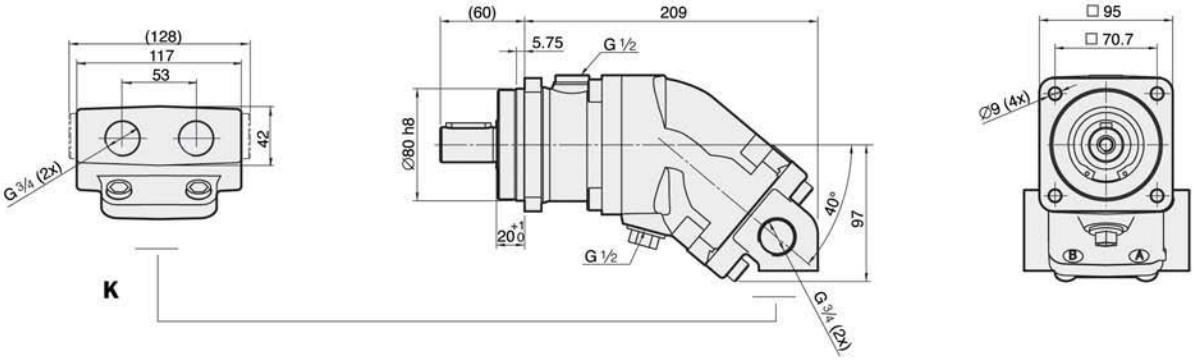

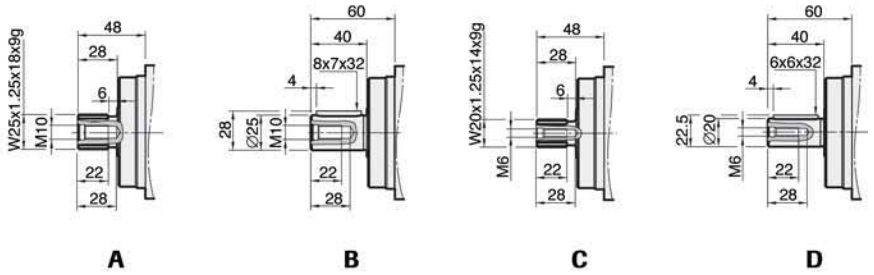

ISO 025-034

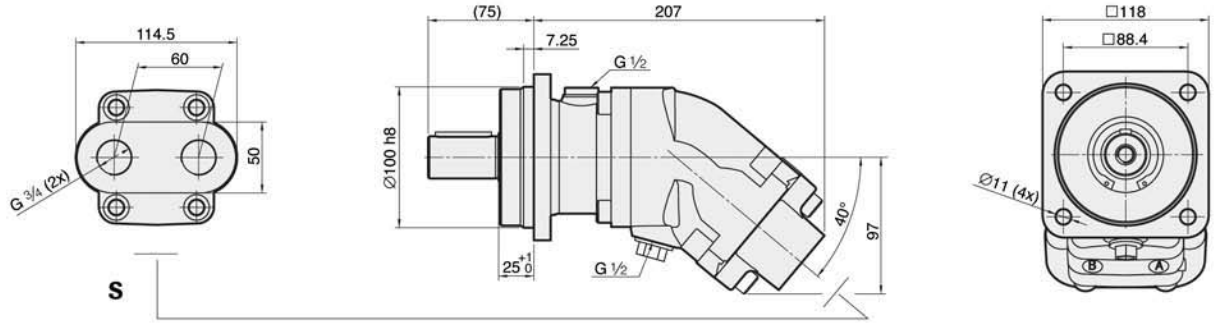
114.5
60
50
G ¾ (2x)
(75)
207
7.25
G ½
Ø100 h8
25 +1 0
G ½
40°
97
□118
□88.4
Ø11 (4x)
B
A
S

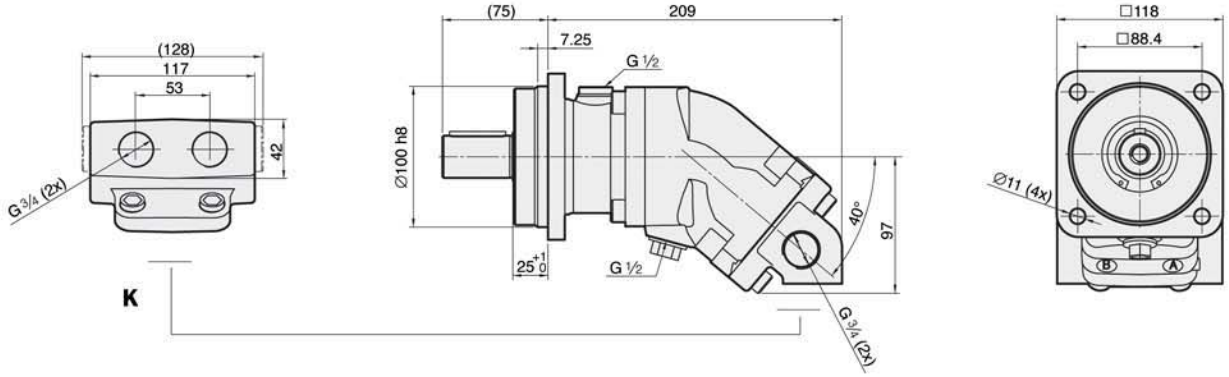
(128)
117
53
42
G ¾ (2x)
(75)
209
7.25
G ½
Ø100 h8
25 +1 0
G ½
40°
97
G ¾ (2x)
□118
□88.4
Ø11 (4x)
B
A
K

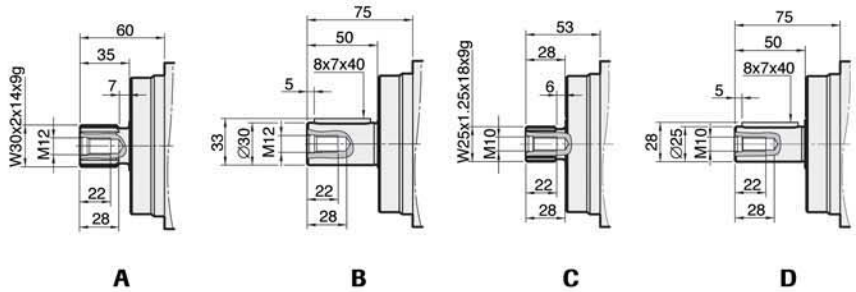
60
35
7
W30x2x14x9g
M12
22
28
A
75
50
8x7x40
5
33
Ø30
M12
22
28
B
53
28
6
W25x1.25x18x9g
M10
22
28
C
75
50
8x7x40
5
28
Ø25
M10
22
28
D

ISO 047-064

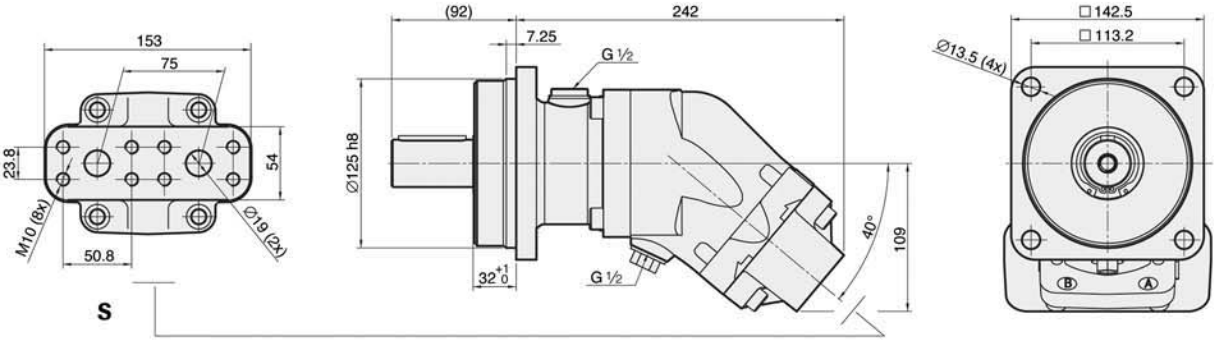

S

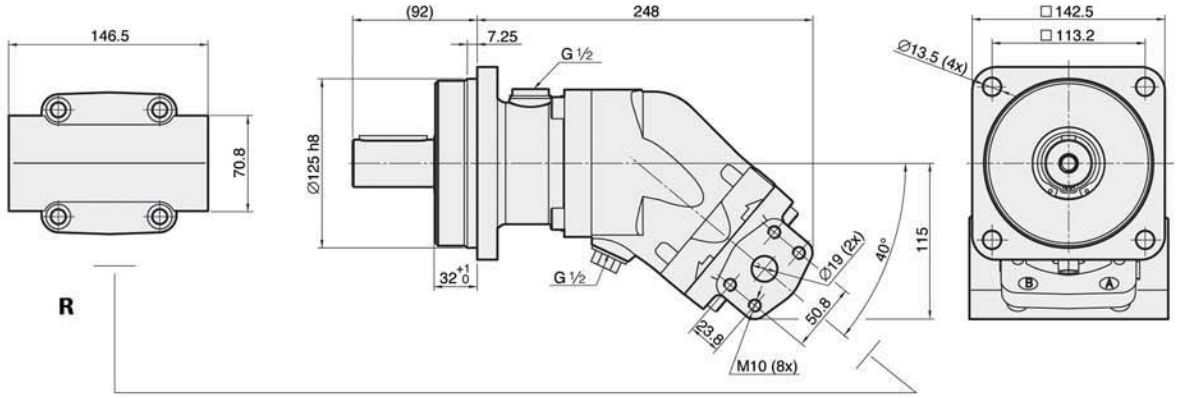

R

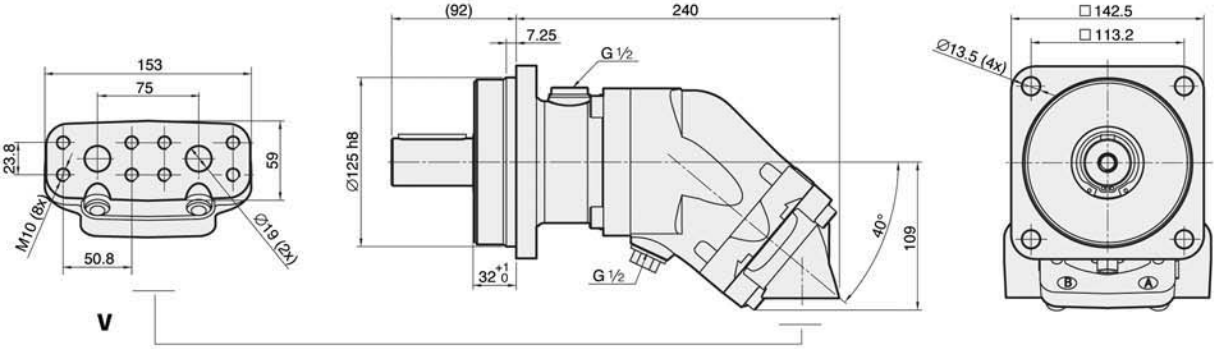

V

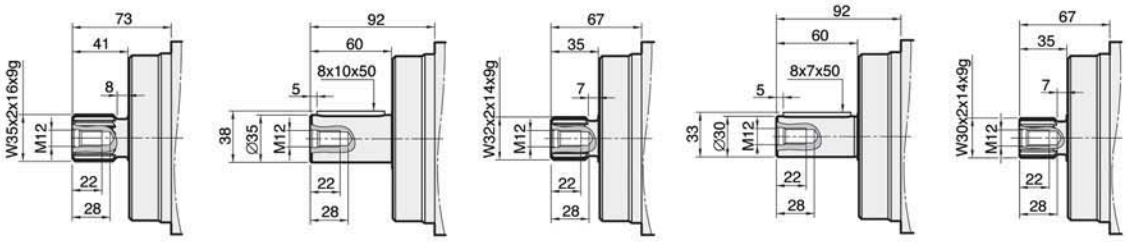

A B C D E

ISO 084

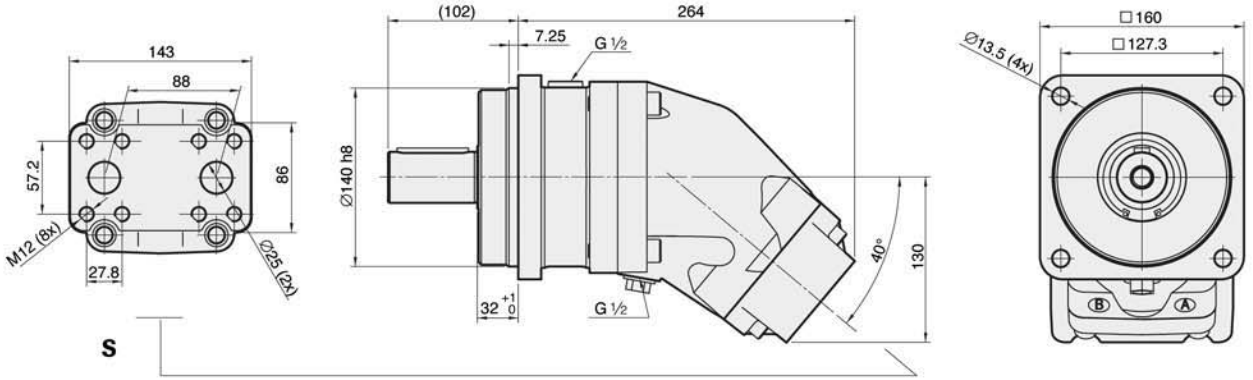

S

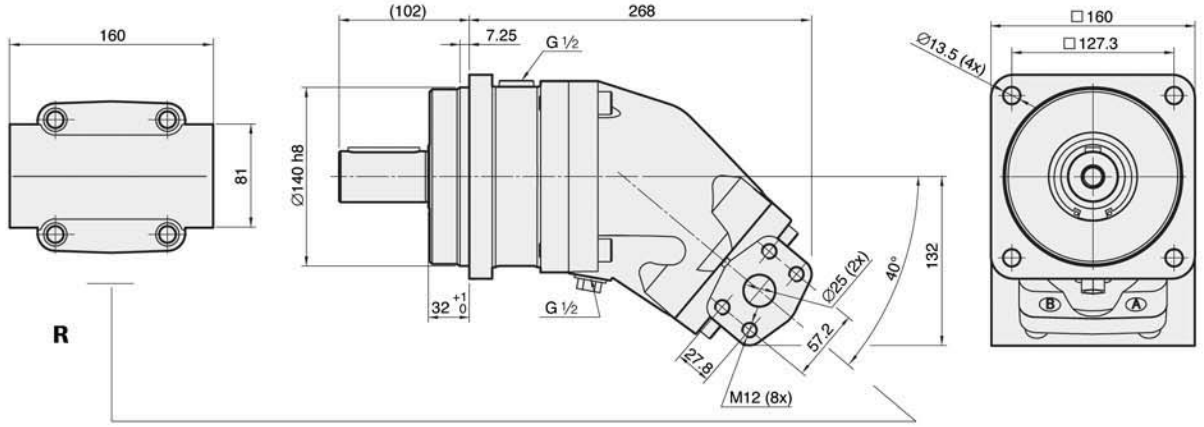

R

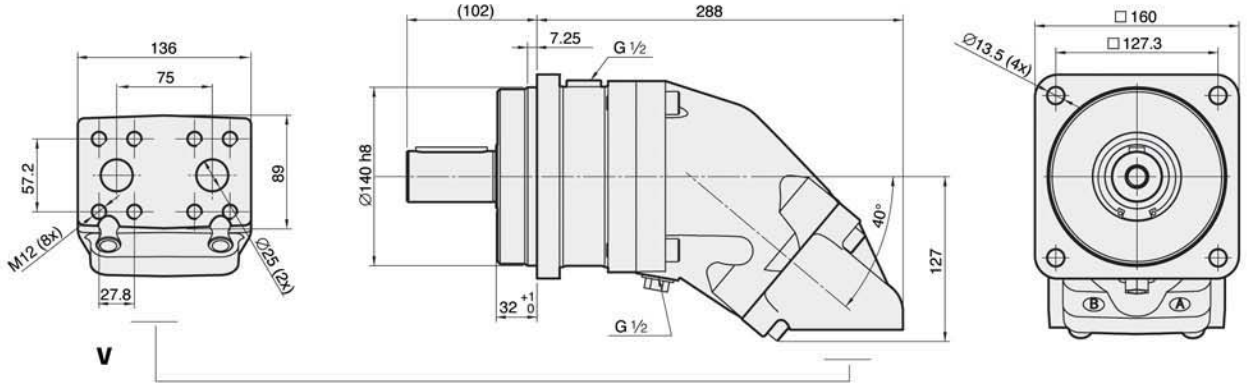

V

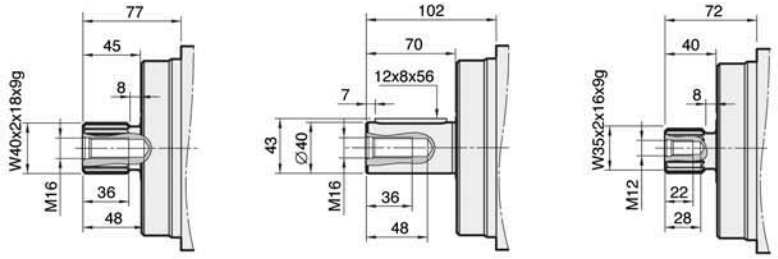

A B C

ISO 108 -130

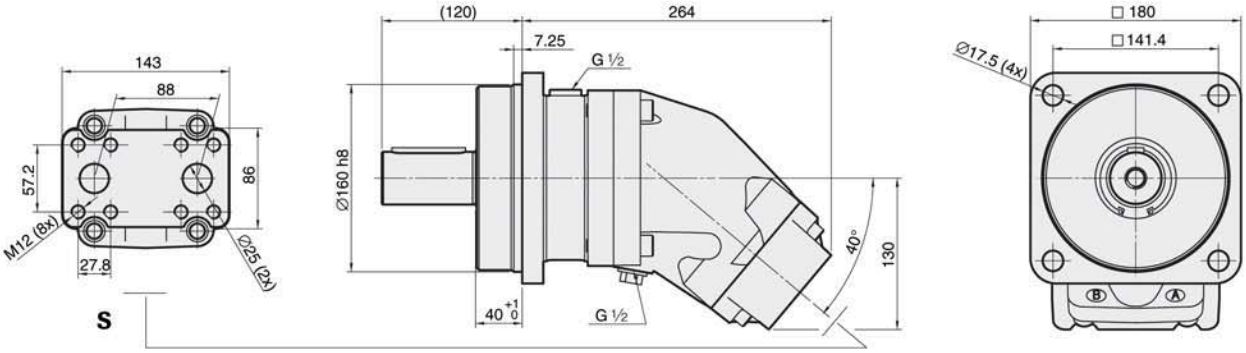
143
88
57.2
86
M12 (8x)
27.8
Ø25 (2x)
S
(120)
264
7.25
G ½
Ø160 h8
40°
130
40 +1 0
G ½
□ 180
□ 141.4
Ø17.5 (4x)
B
A

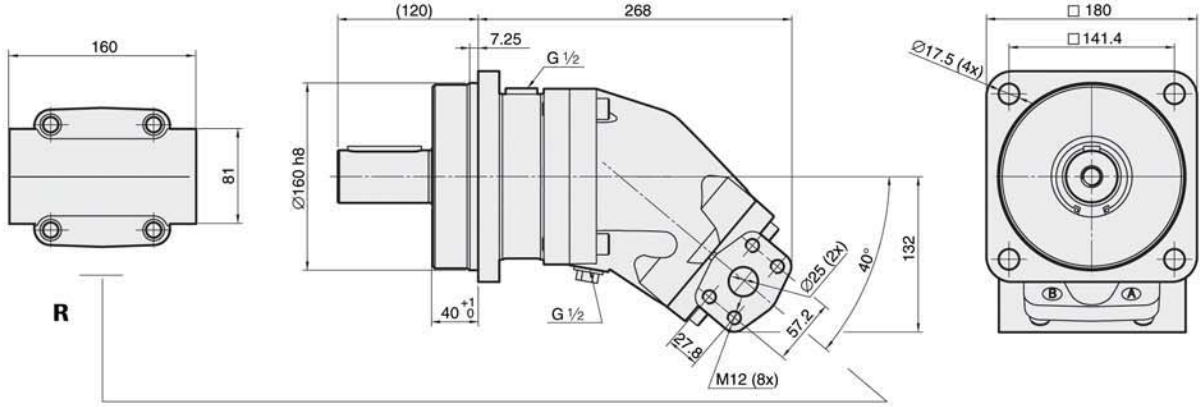
160
81
R
(120)
268
7.25
G ½
Ø160 h8
40°
132
Ø25 (2x)
57.2
27.8
M12 (8x)
40 +1 0
G ½
□ 180
□ 141.4
Ø17.5 (4x)
B
A

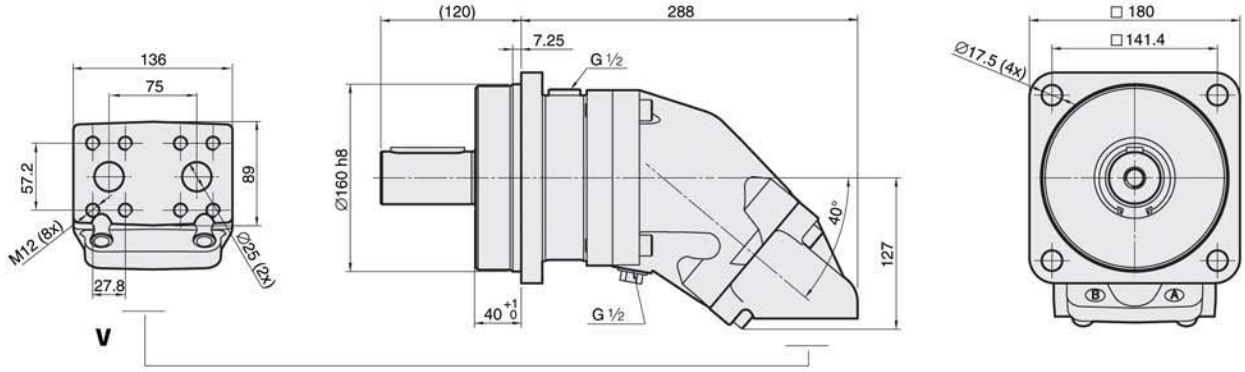
136
75
57.2
89
M12 (8x)
27.8
Ø25 (2x)
V
(120)
288
7.25
G ½
Ø160 h8
40°
127
40 +1 0
G ½
□ 180
□ 141.4
Ø17.5 (4x)
B
A

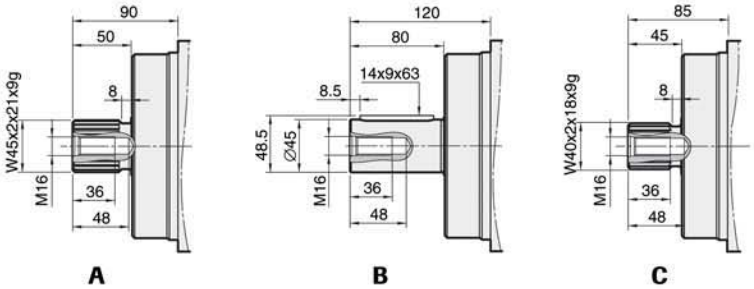
90
50
8
W45x2x21x9g
M16
36
48
A
120
80
14x9x63
8.5
48.5
Ø45
M16
36
48
B
85
45
8
W40x2x18x9g
M16
36
48
C

General instructions

Shaft loads

The life of the motor is highly dependent on the bearing life.

The bearings are affected by operation conditions such as speed, pressure, oil viscosity and filtration. External load on the shaft, as well as its size, direction and location also affect the bearing life.

For calculation of bearing life in special applications, please contact Hydromot.

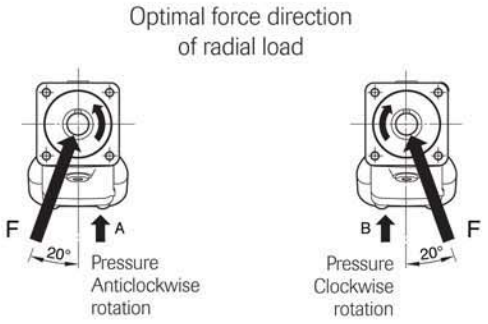

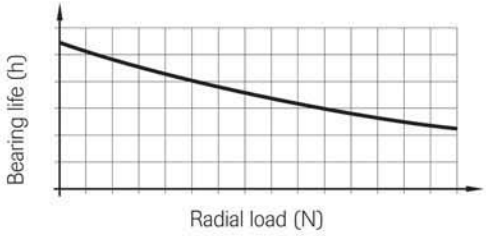

Installation

The motor housing should be filled with oil to at least 50% before starting. The drainage pipe should be connected to topmost drainage outlet.

The other end of the pipe should be connected to the oil tank at a point below the oil level.

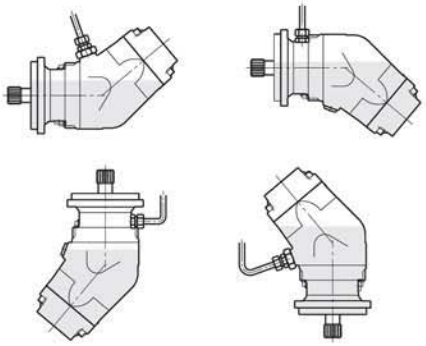

Piping

Recommended oil velocity in pressure line max. 7 m/sec.

Filtrering

Cleanliness according to ISO norm 4406, code 16/13.

Temperatures/Housing cooling

Excessive system temperature reduces the life of the shaft seal and can lower the oil viscosity below the recommended level. A system temperature of 60 °C and a drain flow temperature of 90 °C must not be exceeded. Cooling/flushing of the motor housing can be needed to keep the drain flow temperature at an acceptable level.

Suggested flow:

Motor ISO	Flushing l/min	Cont. RPM
012-034	2-8	≥ 2800
047-064	4-10	≥ 2500
084-130	6-12	≥ 2200

Housing flushing can be built up with the help of a flushing valve or taken directly from the return line. When the return pressure is too low this is compensated for by a counter pressure valve.
The tank line is connected to the highest point as in the figure.

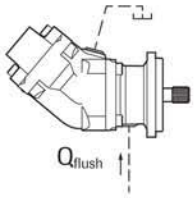

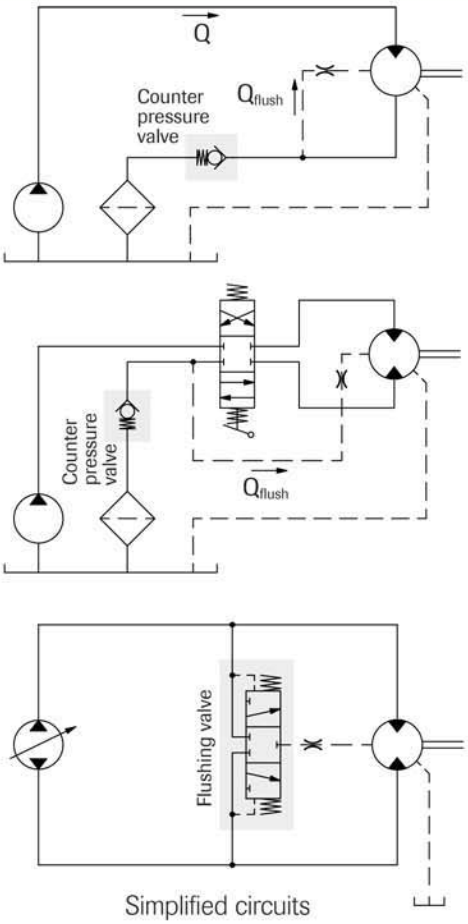

Simplified circuits

Hydraulic fluids

High performance oils meeting ISO specifications – such as HM, DIN 51524-2HLP, or better – must be used.

A min. viscosity of 10 cSt is required to keep the lubrication at a safe level.

The ideal viscosity is 20 - 40 cSt.

Useful formulaes

Required flow rate $Q = \frac{D \times n}{1000 \times \eta_v}$ litres/min.

Speed $n = \frac{Q \times 1000 \times \eta_v}{D}$ RPM

Torque $M = \frac{D \times \Delta p \times \eta_{hm}}{6.3}$ Nm

Power $P = \frac{Q \times \Delta p \times \eta_t}{60}$ kW

D = displacement, cm³/revolution

n = speed, revolution/min

P = power, kW

Q = flow rate, litres/min

η_v = volumetric efficiency

η_{hm} = hydraulic-mechanical efficiency

η_t = overall efficiency = $\eta_v \times \eta_{hm}$

M = torque, Nm

Δp = pressure difference between the hydraulic motor inlet and outlet, MPa